10 - 2016
DTW285RME, DTW285Z
18V LXT Brushless 1/2" Impact Wrench

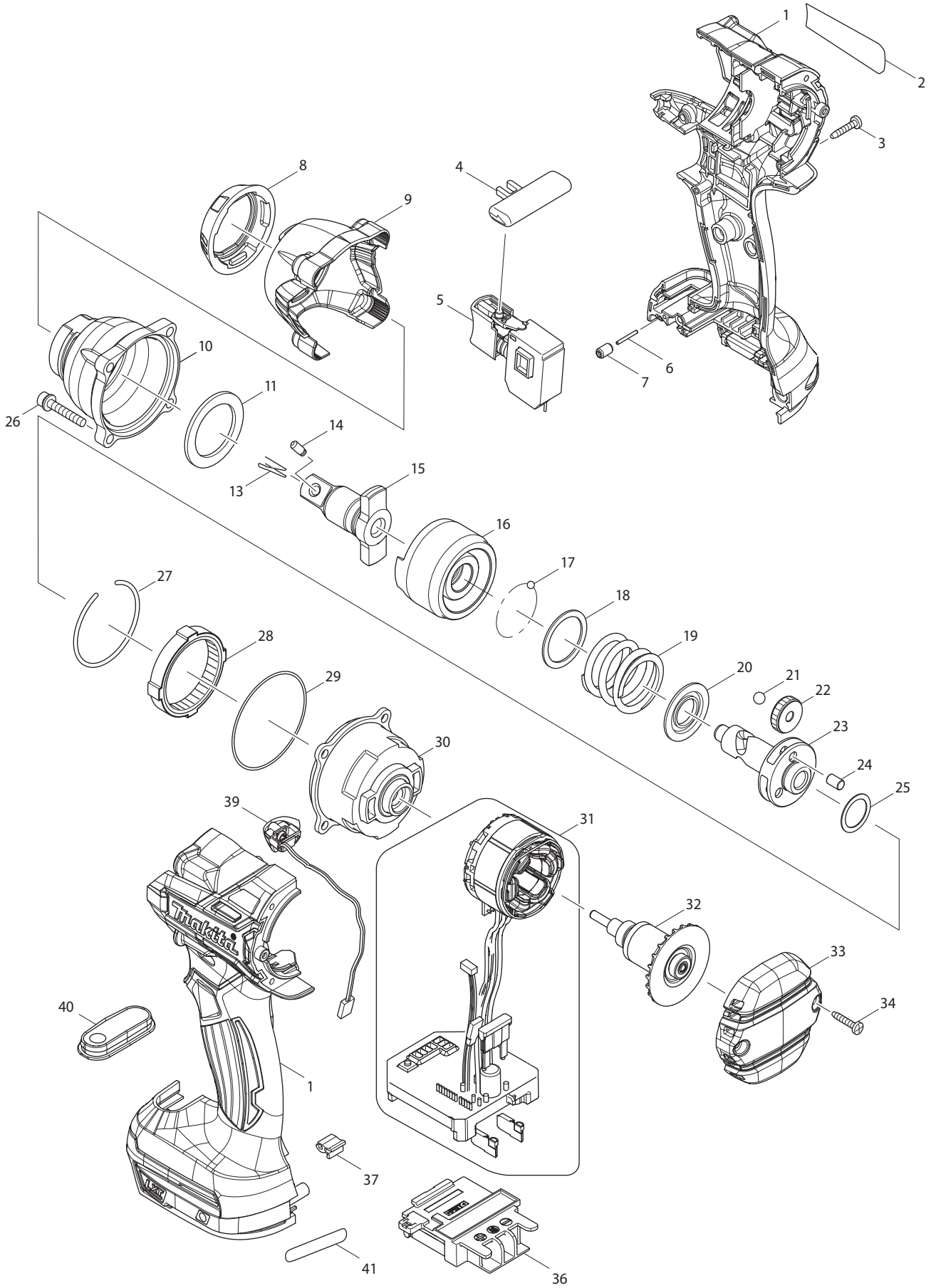

Item	Type	Sub	Part No	Description	Qty	Unit
001			183D46-6	HOUSING SET	1	SET
		INC.	263005-3	RUBBER PIN 6	2	PC.
		INC.	252126-6	HEX LOCKING NUT M4-7	2	PC.
002			852T92-3	NAME PLATE F/DTW285	1	PC.
003			266130-9	TAP SCREW BIND PT 3X16	8	PC.
004			419041-9	CHANGE LEVER F/R	1	PC.
005			650673-5	SWITCH	1	PC.
006			268184-2	PIN 1.5	1	PC.
007			263036-2	RUBBER PIN 5	1	PC.
008			424568-6	BUMPER	1	PC.
009			454851-7	HAMMER CASE COVER	1	PC.
010	1		143911-7	HAMMER CASE COMPLETE	1	PC.
010	2		140K43-7	HAMMER CASE COMPLETE	1	PC.
011			261154-0	NYLON WASHER 28	1	PC.
013			322045-1	CLIP	1	PC.
014			323675-1	PIN 4, ROUND HEAD	1	PC.
015			326899-8	ANVIL A	1	PC.
016			326384-1	HAMMER	1	PC.
017			216001-0	STEEL BALL 3.5	24	PC.
018			267175-0	FLAT WASHER 24	1	PC.
019			234322-8	COMPRESSION SPRING 25	1	PC.
020			267766-7	CUP WASHER 14	1	PC.
021			216011-7	STEEL BALL 5.6	2	PC.
022			227338-0	SPUR GEAR 22	3	PC.
023			326385-9	SPINDLE	1	PC.
024			268311-1	PIN 5	3	PC.
025			253147-1	FLAT WASHER 15	1	PC.
026	1		266915-3	HEX SOCKET HEAD BOLT M4X25	4	PC.
026	2		922146-1	HEX SOCKET HEAD BOLT M4X25	4	PC.
027			233910-8	RING SPRING 43	1	PC.
028			227337-2	INTERNAL GEAR 51	1	PC.
029			213785-1	O RING 49	1	PC.
030			142389-1	INTERNAL GEAR CASE COMPLETE	1	PC.
031	1		632J07-4	STATOR UNIT	1	PC.
031	2		632J24-4	STATOR UNIT	1	PC.
032			619341-9	ROTOR	1	PC.
033			454850-9	REAR COVER	1	PC.
034			266130-9	TAP SCREW BIND PT 3X16	2	PC.
036			643860-3	TERMINAL	1	PC.
037			424517-3	CUSHION	1	PC.
039			620295-5	LED CIRCUIT	1	PC.
040			144217-6	SWITCH PLATE COMPLETE	1	PC.
041			803R54-2	CAUTION LABEL	1	PC.
100			266622-8	+ TRUSS HEAD SCREW M4X12 F/HOOK	1	PC.

ACCESSORIES **- See Catalogue or visit www.makita.ca for more accessories -**

A02			346449-3	HOOK F/14.4V, 18V LI-ION BATTERY	1	PC.
A03			---------	BATTERY CHARGER		
A04			---------	18V LI-ION BATTERY		
A05			---------	LI-ION BATTERY ACCESSORIES		
A05			450128-8	BATTERY COVER F/14.4, 18V LI-ION BATTERY	1	PC.
A06	2		824812-5	PLASTIC CARRYING CASE	1	PC.
		INC.	163455-1	METAL LATCH	2	PC.
A06	Opt.		197211-7	INTERLOCKING TOOL CASE M	1	PC.
		INC.	453974-8	LOCKING LATCH	4	PC.
A07			T-02571	FOAM INSERT F/INTERLOCK CASE	2	PC.
A08			---------	1/2" IMPACT WRENCH ACCESSORIES		
A09			---------	DEEP DRIVE SOCKETS		
A10			---------	WORK GLOVES		